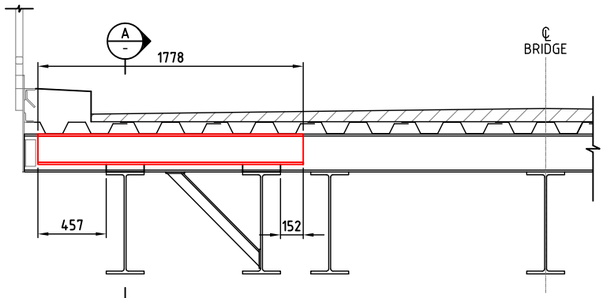

REPAIR CROSS SECTION - BEAM 7
1:20

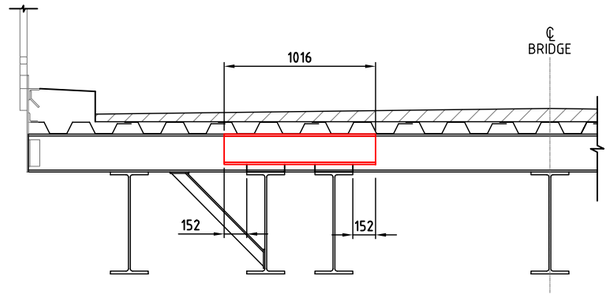

REPAIR CROSS SECTION - BEAM 35
1:20

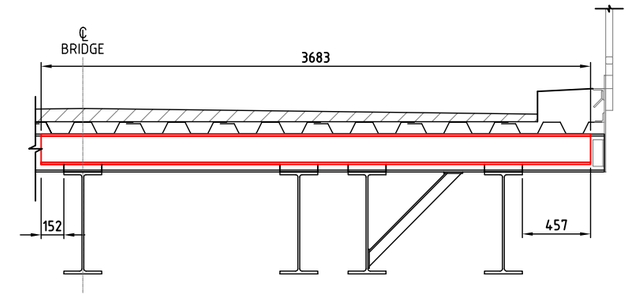

REPAIR CROSS SECTION - BEAM 5
1:20

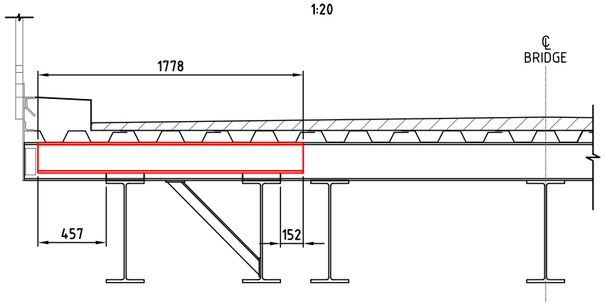

REPAIR CROSS SECTION - BEAM 8
1:20

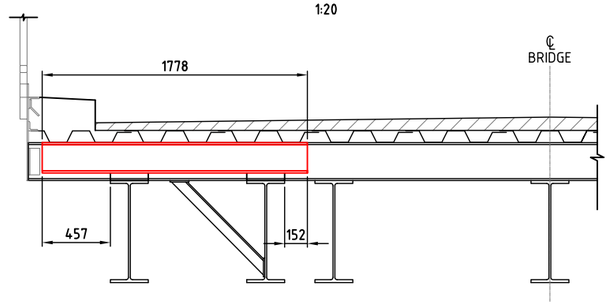

REPAIR CROSS SECTION - BEAM 38
1:20

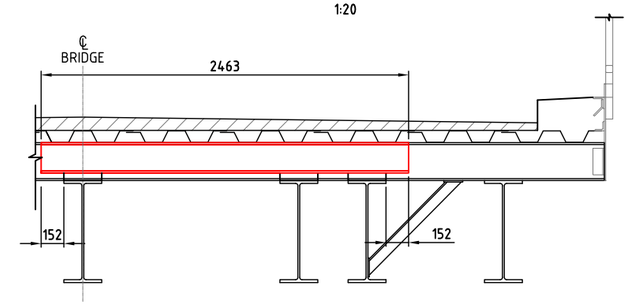

REPAIR CROSS SECTION - BEAM 11
1:20

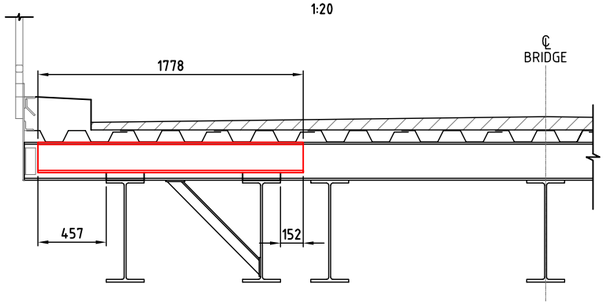

REPAIR CROSS SECTION - BEAM 19
1:20

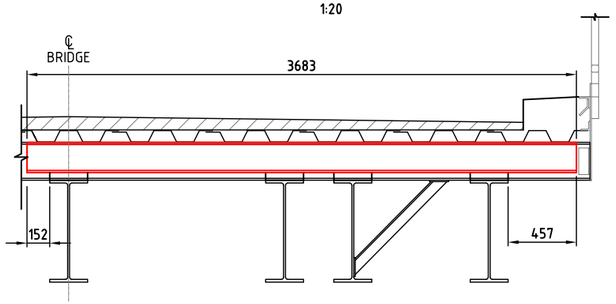

REPAIR CROSS SECTION - BEAM 3
1:20

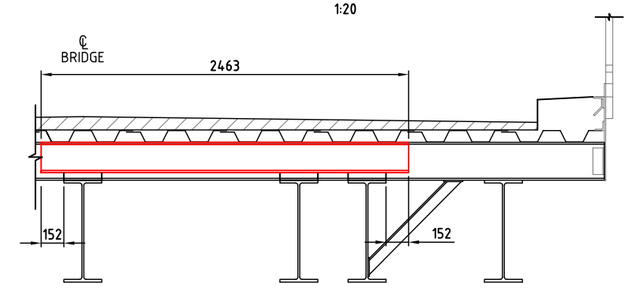

REPAIR CROSS SECTION - BEAM 12
1:20

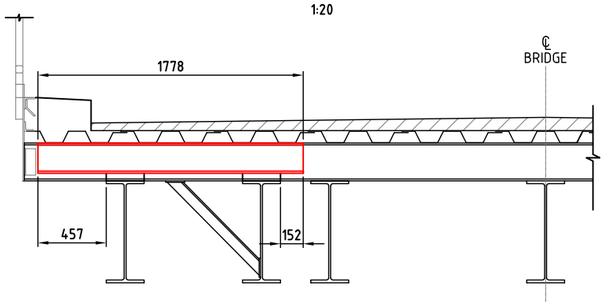

REPAIR CROSS SECTION - BEAM 21
1:20

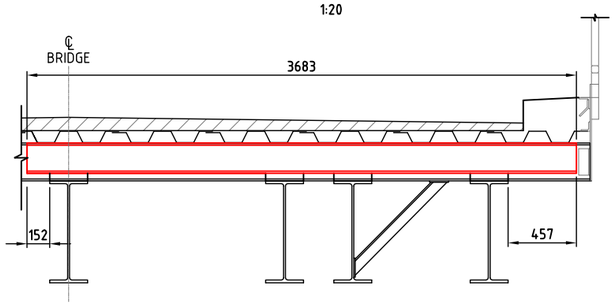

REPAIR CROSS SECTION - BEAM 4
1:20

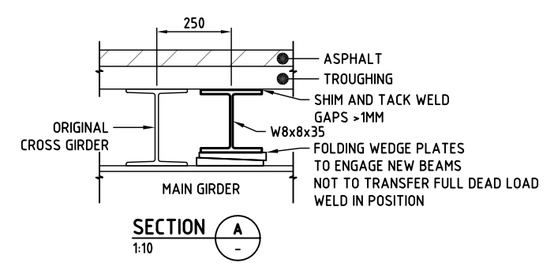

SECTION A
1:10

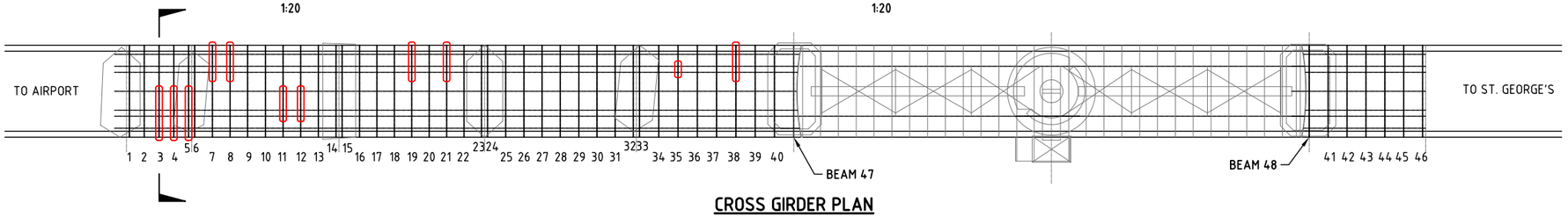

CROSS GIRDER PLAN
1:200

0 200 400 600 800 1000mm
SCALE 1:10 AT ORIGINAL SIZE

0 400 800 1200 1600 2000mm
SCALE 1:20 AT ORIGINAL SIZE

0 4000 8000 12000 16000 20000mm
SCALE 1:200 AT ORIGINAL SIZE

THE MINISTRY OF PUBLIC WORKS
P.O. Box HM525
Hamilton HMCX Bermuda
Phone: (441) 295-5151

DEPARTMENT OF WORKS AND ENGINEERING
Fax: (441) 295-5658

GENERAL NOTES:
1. SURVEY GRID IS BNG2000
2. LEVELS ARE IN METERS ABOVE ORDINANCE DATUM
3. CONTRACTOR TO ENSURE STABILITY OF THE STRUCTURE DURING ALL PHASES OF THE WORKS DEMOLITION
4. ALL NEW STEELWORK TO BE SUPPLIED WITH BLAST PRIMER; TOUCHUP WITH ZINC RICH PRIMER

ISSUED FOR: INFORMATION

AMENDMENTS:

NO:	REVISION	DATE:
A	FOR TENDER	23/06/23

SCALE: AS SHOWN AT ANSI D

SURVEY
PREPARED: – DATE: –

DESIGN
PREPARED: – DATE: 10/11/2016
CHECKED: – DATE: 16/11/2016

DRAWING
PREPARED: A.KENNY DATE: 23/06/2023
CHECKED: – DATE: –

APPROVED BY: A.KENNY

PROJECT NUMBER: 44-01-115-B

PROJECT NAME:
SWING BRIDGE TEMPORARY REPAIRS 2023

ST GEORGE'S

SHEET TITLE:
CROSS GIRDER REPAIR SCHEDULE 2

SHEET NUMBER: S210
REVISION: A